2025/11/13 09:17:47

1115 > T1-6-1 TIMING CASE CAMSHAFT & GEARS YA & YB BUILDS

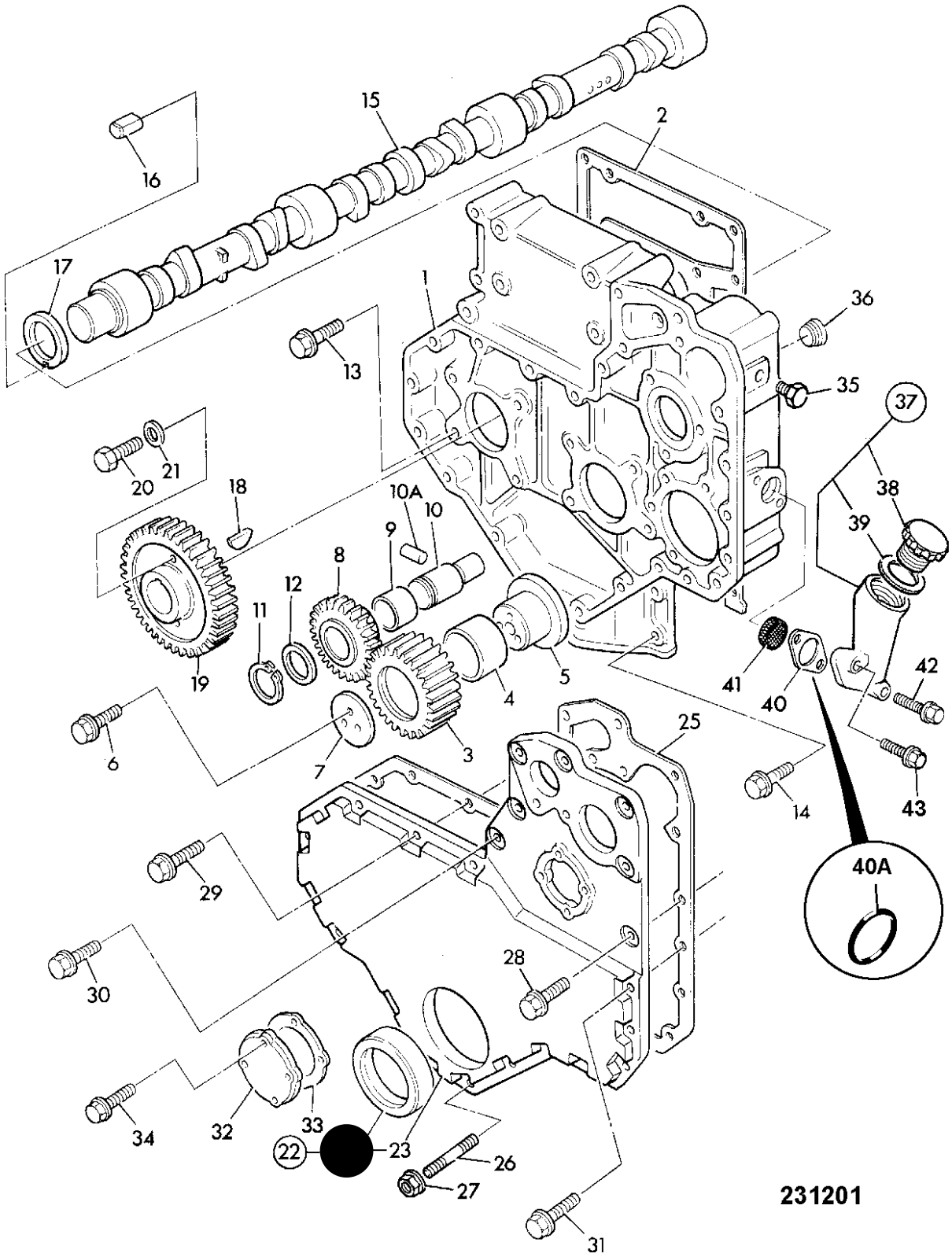
15
2
16
17
1
36
13
35
37
20
21
18
10A
10
38
39
9
8
12
11
19
4
5
41
40
42
6
7
3
25
14
43
40A
29
30
28
34
32
33
22
23
26
27
31
231201

1	⃠ Not for sale	Case timing **Supersession >**	1
2	02/200022	Gasket t/case to block **Supersession >** **ALTERNATIVE**	1
2	⃠ Not for sale	Gasket t/case to block **Supersession >**	1
3	02/190033	Gear idler assembly **< Supersession**	1
4	:02/192016	Bush **< Supersession**	1
5	02/100041	Hub **< Supersession**	1
6	02/291073	Screw	3
7	02/201288	Plate **Supersession >**	1
8	02/290014	Gear idler, oil pump	1
9	:02/290006	Bush **< Supersession**	1
10	02/290028	Shaft idler, oil pump **Supersession >**	1
10A	2102/0813	Pin tension **< Supersession**	1
11	02/100328	Circlip **< Supersession**	1
12	02/200104	Washer	1
13	826/00869	Screw Flange Head	8
14	02/291017	Screw	4
15	02/201238	Camshaft **Supersession >**	1

16	2102/0604	Dowel **< Supersession**	1
17	02/192064	Washer thrust **< Supersession**	1
18	02/100038	Key **< Supersession**	1
19	02/190034	Gear camshaft	1
20	02/291196	Screw	1
21	02/291065	Washer	1
22	⃠ Not for sale	Cover timing **Supersession >**	1
23	⃠ Not for sale	None serviced part **Cover**	1
24	:02/101435	Seal front oil	1
25	02/201241	Gasket timing cover	1
26	02/291051	Stud **< Supersession**	2
27	02/291058	Nut flanged M8 **< Supersession**	2
28	02/291017	Screw	1
29	02/291018	Bolt **Supersession >**	6
30	02/291026	Bolt	6
31	02/291033	Bolt	1
32	⃠ Not for sale	Cover inspection **Supersession >**	1
33	⃠ Not for sale	Gasket inspection cover **Supersession >** **ALTERNATIVE**	1
33	02/200977	Gasket **< Supersession**	1
34	02/291014	Bolt	4

35	02/200829	Plug	1
36	02/100409	Plug taper threaded **< Supersession**	1
37	02/201899	Tube oil filler **< Supersession**	1
38	02/201343	Cap oil filler **< Supersession**	1
39	:02/201098	O Ring	1
40A	02/201097	O Ring **Used only with 02/201899**	1
40	02/201255	Gasket **< Supersession**	1
41	02/200037	Strainer	1
42	02/291020	Bolt	1