2025/11/25 15:55:47

212S [T2] > B1-4-1 STABILISER SIDESHIFT

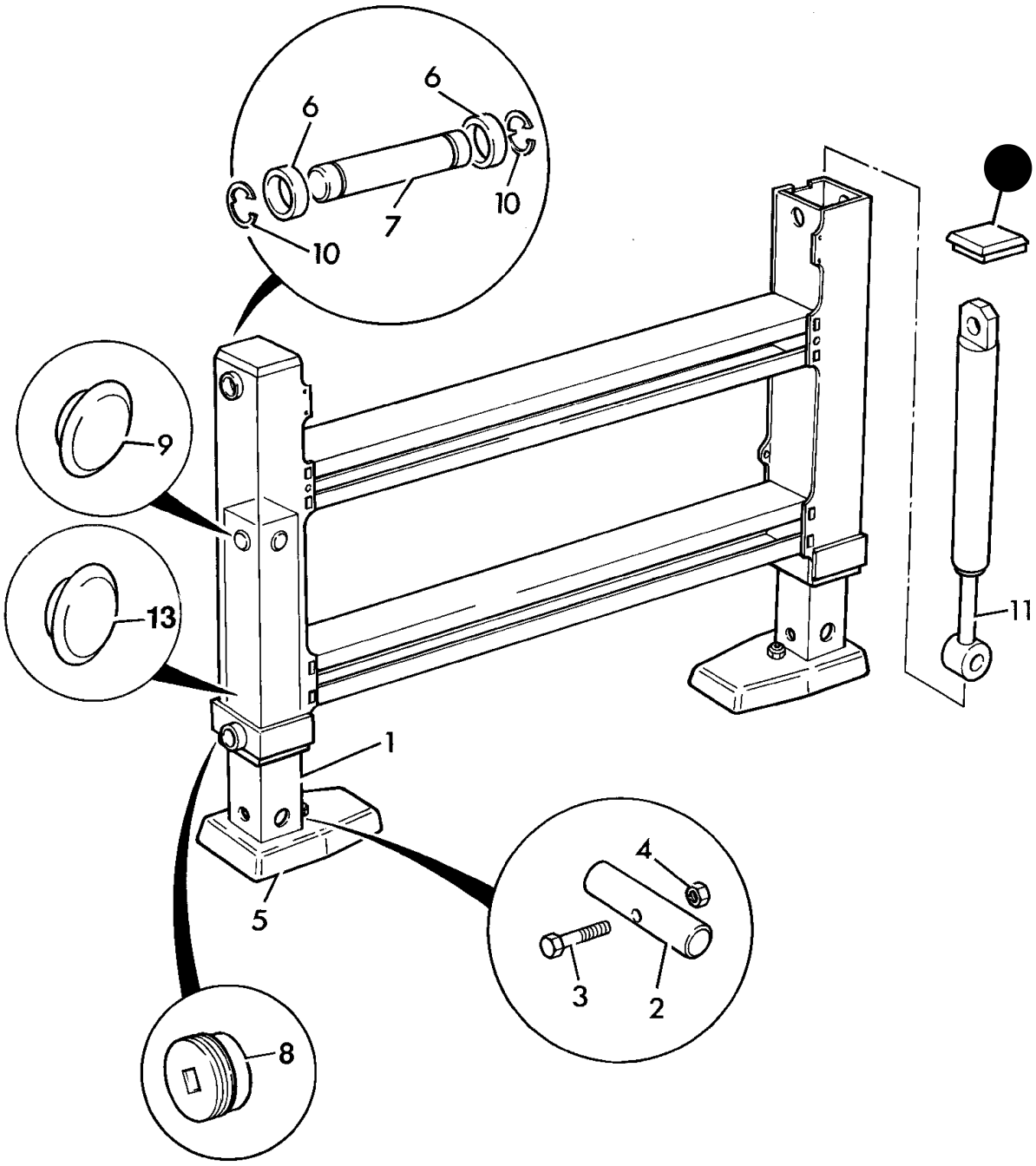

266132

1	125/00193	Leg inner sideshift *<M952167* Supersession >	1
1	335/08022	Leg inner sideshift Supersession >	2
2	811/90590	Pin pivot < Supersession	2
3	1315/3420Z	Bolt (M10 X 100)	2
4	1370/0303Z	Nut Lock M10 Supersession >	2
5	123/06022	Foot sideshift stabiliser Supersession >	2
6	123/06012	Spacer	2
7	811/90587	Pin pivot < Supersession	2
8	128/10850	Pad assembly wear stabiliser leg Supersession >	4
9	🚫 Not for sale	Pad wear,5mm upper colour green Supersession >	8
9	123/07296	Pad wear,6mm upper colour red Supersession >	8
9	🚫 Not for sale	Pad wear,7mm upper colour blue Supersession >	8
10	2203/0060	Circlip 45mm < Supersession	4
11	556/60078	Ram sideshift stabiliser 40mm rod x 70mm cyl Supersession >	2
12	123/06023	Cap Sideshift Stabiliser	2
13	123/06014	Pad wear, lower 6mm thick, colour black	4