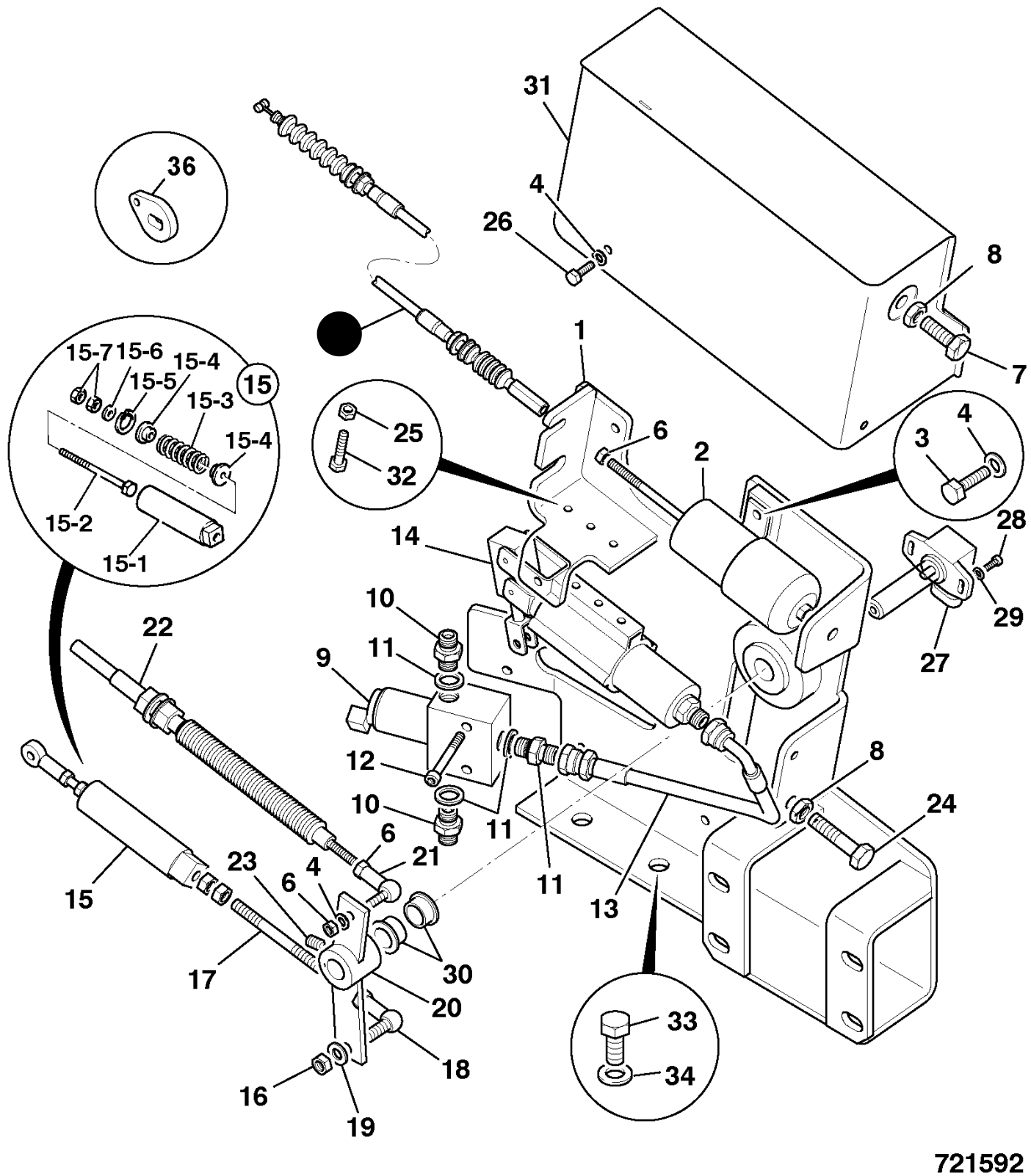
31
36
4
26
8
1
7
15-7
15-6
15-4
15-5
15
15-3
15-4
25
32
6
2
3
4
15-2
15-1
14
28
29
27
10
22
11
9
12
8
10
11
24
6
21
23
4
6
11
13
15
17
30
20
33
18
34
16
19

721592

A	⃠ Not for sale	G.A. ENGINE CONTROL JS160 AUTO	1
1	335/07118	Bracket WA	1
2	716/30091	Solenoid Engine stop Supersession >	1
3	1316/0201D	Screw Set	2
4	1420/0006D	Washer Plain M6 < Supersession	6
5	910/60192	Cable solenoid stop	1
6	1370/0101D	Nut Standard M6 < Supersession	4
7	1316/0408D	Setscrew M10 x 30 G10.9	1
8	1370/0302D	Nut Thin M10	2
9	928/60027	Valve Solenoid Proportional	1
10	1604/2051	Adaptor Supersession >	4
11	1406/0011	Washer Bonded 1/4"BSP < Supersession	4
12	1391/3212D	Screw Cap M6X15 < Supersession	2
13	JLV0285	Hose 1/4" 270mm 180/90	1
14	331/14519	Actuator Cylinder slave	1
15-5	:380A0220Z	Ring snap	1
15-7	:1371/0101D	Nut hex M6 high strength	2
15-6	:1420/0006Z	Washer Plain M6 Supersession >	1
15-2	:JHH0017	Bolt	1
15-4	:KHH0130	Collar special	2
15	KHH0156	Spring assembly < Supersession	1

15-3	:KHH0156	Spring assembly < Supersession	1
15-1	:KHH0157	Coupling cylinder throttle	1
16	1370/0201D	Nut M8 Standard < Supersession	3
17	JHH0161	Rod threaded < Supersession	1
18	JHH0113	Rod end < Supersession	1
19	1420/0007D	Washer M8 < Supersession	1
20	335/05784	Lever	1
21	JHH0112	Rod end < Supersession	1
22	910/60084	Cable engine control < Supersession	1
23	⃠ Not for sale	Screw grub	1
24	1316/0411D	Setscrew M10 X 45	1
25	1370/9401D	Nut Plain M4 < Supersession	3
26	1316/0203D	Setscrew M6 x 16 G10.9	3
27B	:331/65549	Shaft angle sensor nitrocarburized *>M TBA* < Supersession	1
27A	716/30179	Relay potentiometer angle sensor	1
27D	:1450/0001	Nipple Grease Straight 1/8" < Supersession	1
27C	:2102/0207	Pin tension	1
27	⃠ Not for sale	Multi Supersession *<M. TBA* NLA use item 27A with 27B-D,30A,31A	1
28	1391/9402	Capscrew M4 x 12 G12.9	2
29	1420/0004D	Washer Plain M4 < Supersession	2

30	831/10237	Bush Flanged Supersession >	2
30A	831/10413	Bush flanged < Supersession	2
31A	331/60214	Cover < Supersession	1
32	1315/9405D	Setscrew M4x20	3
33	1316/0508D	Setscrew M12 X 30 G10.9	4